Focus
single lever kitchen mixer 260 for vented hot water cylinders
Surfaces: **chrome** Article Number: **31822000**

Description

product features

- ComfortZone 260
- swivel range adjustable in 3 steps 110°, 150° or 360°
- handle can be positioned on the right or left
- not suitable for continuous flow water heaters

Technology

Product image
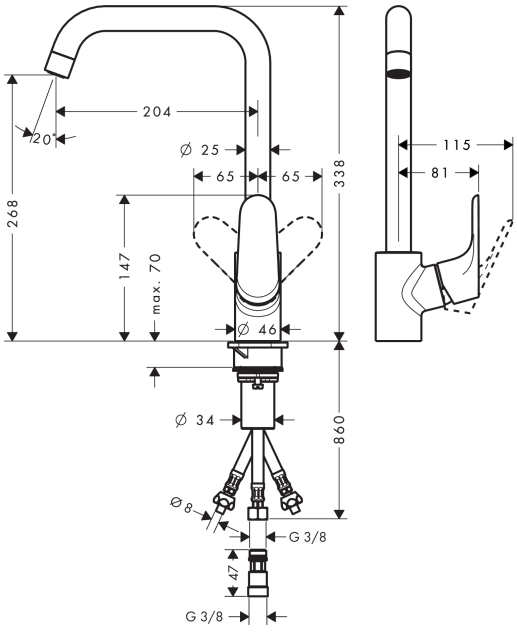
Scale drawing