AXOR

hansgrohe

AXOR Universal Accessories
Towel holder twin-handle
Surfaces: **Chrome** Article Number: **42821000**

Description

product features

- drilling distance 80 mm
- material: metal
- wall-mounted
- length 409 mm
- arms swivel independently

Product image
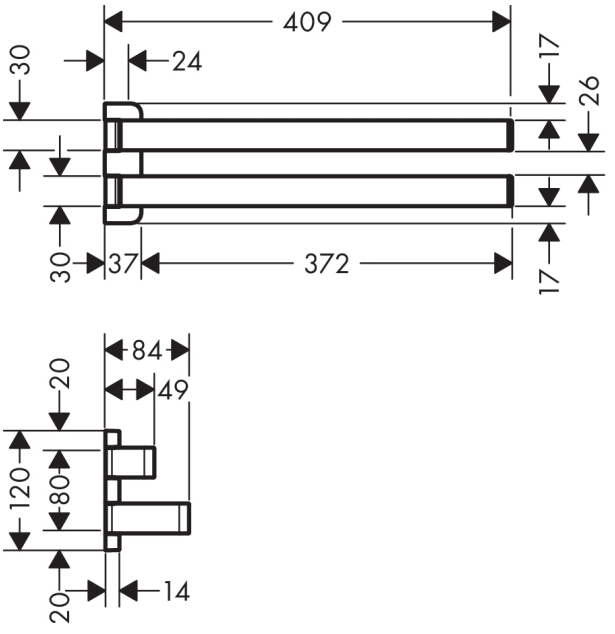
Scale drawing